Z	d_e	d_p	SIMPLEX			WEIGHT	DUPLEX			TRIPLEX		
			d_m	D_1	A	kg	d_m	D_2	A	d_m	D_3	A
8	28.0	24.89	15	8	20	0.03	15	8	22	15	8	32
9	31.0	27.85	18	8	20	0.04	18	8	22	18	8	32
10	34.0	30.82	20	8	20	0.06	20	8	22	20	10	32
11	37.0	33.80	22	8	25	0.08	22	10	25	22	10	35
12	40.0	36.80	25	8	25	0.10	25	10	25	25	10	35
13	43.0	39.79	28	10	25	0.12	28	10	25	28	10	35
14	46.3	42.80	31	10	25	0.15	31	10	25	31	12	35
15	49.3	45.81	34	10	25	0.19	34	10	25	34	12	35
16	52.3	48.82	37	10	28	0.24	37	12	30	37	12	35
17	55.3	51.83	40	10	28	0.29	40	12	30	40	12	35
18	58.3	54.85	43	10	28	0.33	43	12	30	43	12	35
19	61.3	57.87	45	10	28	0.37	46	12	30	46	12	35
20	64.3	60.89	46	10	28	0.39	49	12	30	49	12	35
21	68.0	63.91	48	12	28	0.42	52	12	30	52	14	40
22	71.0	66.93	50	12	28	0.46	55	12	30	55	14	40
23	73.5	66.95	52	12	28	0.50	58	12	30	58	14	40
24	77.0	72.97	54	12	28	0.54	61	12	30	61	14	40
25	80.0	76.00	57	12	28	0.60	64	12	30	64	14	40
26	83.0	79.02	60	12	28	0.67	67	12	30	67	14	40
27	86.0	82.05	60	12	28	0.68	70	12	30	70	14	40
28	89.0	85.07	60	12	28	0.70	73	12	30	73	14	40
29	92.0	88.09	60	12	28	0.72	76	12	30	76	14	40
30	94.7	91.12	60	12	28	0.77	79	12	30	79	14	40
31	98.3	94.15	65	14	30	0.88	80	16	30	80	16	40
32	101.3	97.17	65	14	30	0.90	80	16	30	80	16	40
33	104.3	100.20	65	14	30	0.91	80	16	30	80	16	40
34	107.3	103.23	65	14	30	0.94	80	16	30	85	16	40
35	110.4	106.26	65	14	30	0.95	80	16	30	85	16	40
36	113.4	109.29	70	14	30	1.07	90	16	30	90	16	40
37	116.4	112.32	70	14	30	1.09	90	16	30	90	16	40
38	119.5	115.35	70	14	30	1.10	90	16	30	90	16	40
39	122.5	118.37	70	14	30	1.12	90	16	30	90	16	40
40	125.5	121.40	70	14	30	1.16	90	16	30	90	16	40
41	128.5	124.43	78	14	32	1.21	90	16	40	90	16	56
42	131.6	127.46	78	14	32	1.26	90	16	40	90	16	56
43	134.6	130.49	78	14	32	1.31	90	16	40	90	16	56
44	137.6	133.52	78	14	32	1.36	90	16	40	90	16	56
45	140.7	136.55	78	14	32	1.40	90	16	40	90	16	56
46	143.7	139.58	78	14	32	1.45	90	16	40	90	16	56
47	146.7	142.61	78	14	32	1.50	90	16	40	90	16	56
48	149.7	145.64	78	14	32	1.55	90	16	40	90	16	56
49	152.7	148.66	78	14	32	1.57	90	16	40	90	16	56
50	155.7	151.69	78	14	32	1.60	90	16	40	90	16	56
51	158.7	154.72	78	14	32	1.61	90	16	40	90	16	56
52	161.8	157.75	78	14	32	1.62	90	16	40	90	16	56
53	164.8	160.78	78	14	32	1.63	90	16	40	90	16	56
54	167.8	163.82	78	14	32	1.65	90	16	40	90	16	56
55	170.8	166.85	78	14	32	1.67	90	16	40	90	16	56
56	173.8	169.88	78	14	32	1.69	90	16	40	90	16	56
57	176.9	172.91	78	14	32	1.70	90	16	40	90	16	56
58	179.9	175.93	78	14	32	1.78	90	16	40	90	16	56
59	183.0	178.96	78	14	32	1.85	90	16	40	90	16	56
60	186.0	181.99	78	14	32	1.92	90	16	40	90	16	56
62	192.1	188.06	78	14	32	2.03	90	16	40	90	16	56
64	198.2	194.12	78	14	32	2.14	90	16	40	90	16	56
65	201.6	197.15	*78	14	32	2.19	*90	16	40	*90	16	56
66	204.6	200.18	*78	14	32	2.21	*90	16	40	*90	16	56
68	210.7	206.24	*78	14	32	2.28	*90	16	40	*90	16	56
70	216.7	212.30	*78	14	32	2.36	*90	16	40	*90	16	56
72	222.8	218.37	*78	14	32	2.58	*90	16	40	*90	16	56
75	231.9	227.46	*78	14	32	2.68	*90	16	40	*90	16	56
76	234.9	230.49	*78	14	32	2.79	*90	16	40	*90	16	56
78	241.0	236.55	*78	14	32	2.94	*90	16	40	*90	16	56
80	247.1	242.61	*78	14	32	3.08	*90	16	40	*90	16	56
85	262.2	257.77	*80	14	32	4.93	*90	16	40	*90	16	56
90	277.4	272.93	*80	14	32	3.66	*90	16	40	*90	16	56
95	292.5	288.08	*80	14	32	3.95	*90	16	40	*90	16	56
100	307.7	303.25	*80	14	32	4.73	*90	16	40	*90	16	56
110	338.0	333.55	*80	14	32	5.27	*90	16	40	*90	16	56
114	349.5	345.68	*80	14	32	5.50	*90	16	40	*90	16	56
120	368.3	363.86	*80	14	32		*90	16	40	*90	16	56
125	383.5	379.02	*80	14	32		*90	16	40	*90	16	56

06B-1-2-3

SPROCKETS 3/8" × 7/32"

For chain Acc.to DIN 8187
ISO/R606

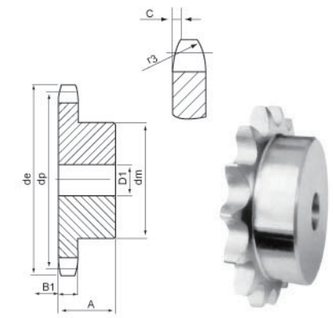

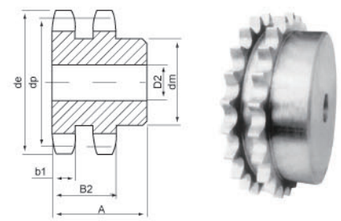

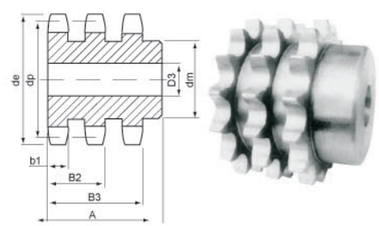

SPROCKETS	mm
Tooth radius r_3	10
Radius width C	1
Tooth width B_1	5.3
Tooth width b_1	5.2
Tooth width B_2	15.4
Tooth width B_3	25.6

CHAIN	mm
Pitch	9.525
Internal width	5.72
Roller Φ	6.35

Material:C 45
***Weld on hub**

Z	d_e	d_p	S	D	T
			D_1	D_2	D_3
8	28.0	24.89	6	8	8
9	31.0	27.85	8	8	8
10	34.0	30.82	8	8	10
11	37.0	33.80	8	10	10
12	40.0	36.80	8	10	10
13	43.0	39.79	8	10	10
14	46.3	42.80	8	10	12
15	49.3	45.81	8	10	12
16	52.3	48.82	10	12	12
17	55.3	51.83	10	12	12
18	58.3	54.85	10	12	12
19	61.3	57.87	10	12	12
20	64.3	60.89	10	12	12
21	68.3	63.91	10	12	14
22	71.0	66.93	10	12	14
23	73.5	69.95	10	12	14
24	77.0	72.97	10	12	14
25	80.0	76.02	10	12	14
26	83.0	79.02	10	12	14
27	86.0	82.02	10	12	14
28	89.0	85.07	10	12	14
29	92.0	88.09	10	12	14
30	94.7	91.12	10	12	14
31	98.3	94.15	12	14	16
32	101.3	97.17	12	14	16
33	104.3	100.20	12	14	16
34	107.3	103.23	12	14	16
35	110.4	106.26	12	14	16
36	113.4	109.29	12	14	16
37	116.4	112.32	12	14	16
38	119.5	115.35	12	14	16
39	122.5	118.37	12	14	16
40	125.5	121.40	12	14	16
41	128.5	124.43	16	16	16
42	131.6	127.46	16	16	16
43	134.6	130.49	16	16	16
44	137.6	133.52	16	16	16
45	140.7	136.55	16	16	16
46	143.7	139.58	16	16	16
47	146.7	142.61	16	16	16
48	149.7	145.64	16	16	16
49	152.7	148.66	16	16	16
50	155.7	151.69	16	16	16
51	158.7	154.72	16	16	20
52	161.8	157.75	16	16	20
53	164.8	160.78	16	16	20
54	167.8	163.82	16	16	20
55	170.8	166.85	16	16	20
56	173.8	169.88	16	16	20
57	176.9	172.91	16	16	20
58	179.9	175.93	16	16	20
59	183.0	178.96	16	16	20
60	186.0	181.99	16	16	20
62	192.1	188.06	20	20	20
64	198.2	194.12	20	20	20
65	201.6	197.15	20	20	20
66	204.6	200.18	20	20	25
68	210.7	206.24	20	20	25
70	216.7	212.30	20	20	25
72	222.8	218.37	20	20	25
75	231.9	227.46	20	20	25
76	234.9	230.49	20	20	25
78	241.0	236.55	20	20	25
80	247.1	242.61	20	20	25
85	262.2	257.77	20	20	25
90	277.4	272.93	20	20	25
95	292.5	288.08	20	20	25
100	307.7	303.25	20	20	25
110	338.0	333.55	20	20	25
114	349.5	345.68	20	20	25
120	368.3	363.86	20	20	25
125	383.5	379.02	20	20	25

06A-1-2-3

PLATEWHEELS 3/8" × 7/32"

For chain Acc.to DIN 8187
ISO/R606

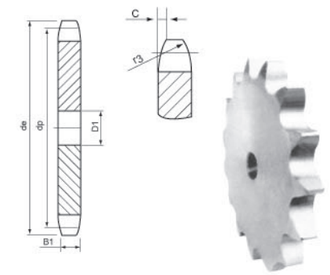

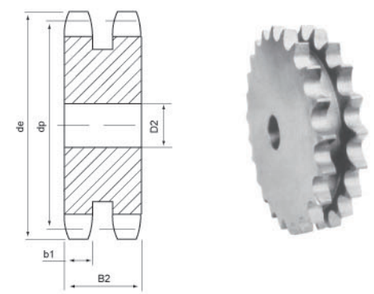

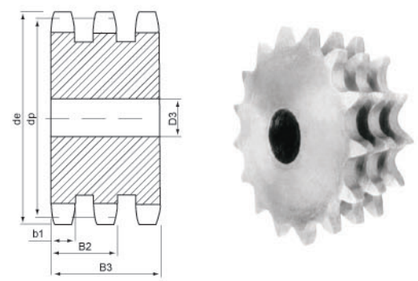

PLATEWHEELS	mm
Tooth radius r_3	10
Radius width C	1
Tooth width B_1	5.3
Tooth width b_1	5.2
Tooth width B_2	15.4
Tooth width B_3	25.6

CHAIN	mm
Pitch	9.525
Internal width	5.72
Roller Φ	6.35

H=4mm,From Z=100 the width of the plate is increased